WMP SERIES POLYPROPYLENE MAGNETIC INDUCTIVE FLOWMETER

The WMP is a full-bore, plastic-bodied electromagnetic flow meter designed for flow and usage monitoring applications in 1 and 2 inch pipe. The polypropylene flow tube offers corrosion resistance to a wide range of chemicals. Its light weight and easy to install or remove from the pipe for inspection.

With no moving parts, the magmeter permits unobstructed flow, minimising flow disturbances and hence, straight pipe requirements. The WMP-Series can be used in piping configurations where there is little space between the meter and an elbow or valve. The WMP-Series, like other magmeters, are resistant to wear from sand and debris found in ground or surface water. Since there are no bearings or propeller to wear out, downtime and maintenance and repair costs are kept to a minimum. Because there are no mechanical parts in the flow stream, the meter tolerates high flows without damage.

BATTERY POWERED OPTION
DURABLE POLYPROPYLENE BODY
IDEAL FOR IRRIGATION APPLICATIONS
DISPLAY OF FLOW RATE AND TOTAL

Technical Information

Pipe size	1 or 2 inch full port	
Fittings	1 inch NPTF, 2 inch flange clamps with optional 2 inch NPTF fitting kit	
Body	Glass-filled polypropylene	
Electrodes	316 stainless steel	
Electronics Housing	Diecast aluminium, powder-coated	
Display Cover	Polyethylene	
Pressure	10.3 bar working pressure @21˚ C	
Accuracy	+/- 1% of reading across rated range	
	+/- 1% of reading across rated range	
Minimum Flow	1 inch model: 0.145 liters per second 2 inch model: 0.38 liters per second	
Maximum Flow	1 inch model: 110 gallons per minute (6.94 liters per second) 2 inch model: 300 gallons per minute (18.9 liters per second)	
Digits	6 (Flow Rate)	8 (Totaliser)
Units	Gallons/Minute, Cubic Feet/ Second, Cubic Feet/Minute, Liters/ Second Liters/Minute, Cubic Meters/Minute	Acre-Feet, Acre-Inch, Gallons, Gallons x 1000, Cubic Feet, Liters, Megaliters, Cubic Meters
Security	Cross-drilled screws and tamper-evident seal (optional)	
WMP101	10-30 Vdc @60 mA max (15 mA average) NOTE: Using an unregulated power supply >18 Vdc may damage the meter due to ACline input voltage fluctuation	
WMP104	6 each AA alkaline cells, replaceable. Estimated life is 1-year with meter in typical use, or 3-years dry. 2 each Clithium batteries, replaceable. Estimated life is 3-years with meter in typical use, or 10-years dry	
Pulse Output Signal (WMP101 Only) Pulse Rate	Current sinking pulse, opto isolated, 24 Vdc at 10 mA max 1 gal/pulse out, or 1 liter/pulse out, depending on unit selection. Pulse width of 10ms	
High Frequency Output (WMP101 Only)	Optional, 30 PPG, pulse width 1.1 ms, min - max frequency, 3 - 150 hz	
Empty Pipe Detection	Hardware/software, conductivity-based	
Conductivity	>20 micro Siemens	
Environmental	NEMA 4X standard; -40˚ to 176˚ F (-40˚ to 80˚ C) storage	
Electrical Connection (WMP101 Only)	5 pin male circular connector, mates to industry standard cable	

Magnetic Inductive Flowmeters

WMP series polypropylene magnetic inductive flowmeter

Dimensional Information

1" units

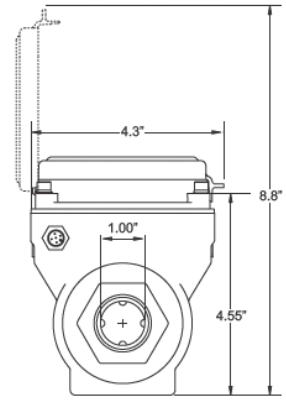

2" units

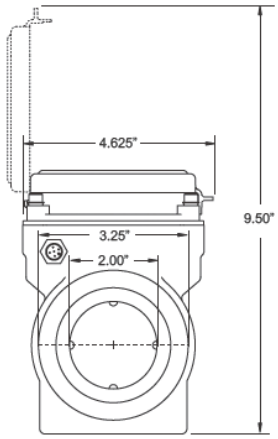

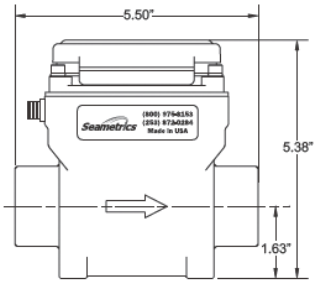

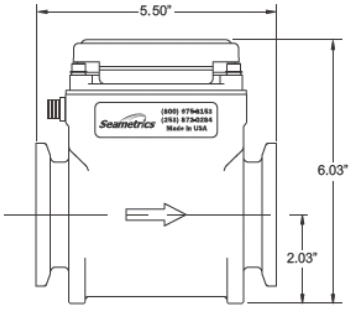

Options & Ordering Information

MODEL

External Power = **WMP101**

Battery Power = **WMP104**

SIZE

1" = **-100**

2" = **-200**

OPTIONS

Tamper-evident seal, screws, and wire = **-32**

Extended Battery Life = **-133**

High frequency output = **-HF**

UNITS

RATE	ORDER	TOTAL	ORDER
Gal/Min	= **GPM**	Gal	= **G**
Liters/Sec	= **LPS**	Gal x 1000	= **GT**
Liter/Min	= **LPM**	Cubic Feet	= **CF**
Cu Ft/Sec	= **CFS**	Acre Inch	= **AI**
Cu Ft/Min	= **CFM**	Acre Feet	= **AF**
Cu Met/Min	= **CMM**	Liter	= **L**
		Mega Liters	= **ML**
		Cubic Meters	= **CM**

Consult factory for additional units.

ACCESSORIES

20 foot (6m) cable for WMP101 = **32482**

Seametrics WMP Fitting Kit = **31980**
(for 2 inch model)
- 2 FNPT threaded adapters
- 2 flange clamps
- 2 EPDM gaskets

Remote 4-20 mA (analog) signal = **AO55W (-HF Option Required)**

Remote Rate and Total Indicator = **FT420W (-HF Option Required)**

Remote Data Logger = **DL76W**