RN3 TURBINE FLOWMETER

RN3 FLOWMETER

This range of flowmeters will provide you with a highly accurate and economical way of measuring liquids over the range of 1 to 2250 litres/min.

FEATURES & BENEFITS

- Robust stainless steel construction
  - Corrosion resistant
  - Very low maintenance and down time
  - Withstands high temperature & pressure
- Highly accurate measurement of flow
  - Well proven
  - Improved product quality
  - Reduce waste and costs
- High quality manufacture
  - ISO9001 certified company
  - Approvals for use in hazardous areas
  - Individual calibration certificates
- Low pressure drop
- Bi-directional flow capability

PRODUCT CONFIGURATION

1 MATERIAL (Body/Gears/Bearing)

Body: 316 stainless steel

2 BEARING TYPE

Sleeve bearings: Standard - carbon graphite filled PTFE (max temperature 180°C)
Optional tungsten carbide (max temperature 300°C)

3 ROTOR/ROTOR SHAFT MATERIAL

431 S/S or ferralium / Tungsten carbide

4 HANGERS/ CIRCLIPS

316 stainless steel / 316 stainless steel

5 INSTRUMENTATION

The signal can be used for a local display, remote display or converted for transmission to a separate control system. We have a range of instruments to suit all your requirements.

6 PRINCIPLE OF OPERATION

When liquid flows and the rotor turns, the sensor detects the movement of the blade tips and generates pulses. The frequency of the pulses is proportional to the flowrate.

7 CALIBRATION

All RN3 turbine flowmeters are individually calibrated with water and are traceable to national standards. We provide you with a test certificate for each meter showing the number of pulses per litre, which is used to set the instrumentation.

8 INSTALLATION

The flowmeter is installed directly into the pipeline. To reduce turbulence and get the best results from your flowmeter we recommend that you install it in a straight section of pipe with at least 10 pipe diameters upstream and 5 pipe diameters downstream. Control valves should be installed downstream of the flowmeter. To prevent foreign particles blocking your line we recommend you install a filter before the flowmeter.

Preamplifiers are only needed if you have very long transmission distances or an electrically noisy environment close to pumps, motors, generators, switchgear or heavy current carrying cables.

Intrinsically safe systems always require an IS pick-off coil. The IS P5 preamplifier is required for transmission to a safe area through barriers.

9 CONSTRUCTION

The stainless steel construction is durable and gives excellent corrosion resistance. The rotor is machined from solid making it virtually indestructible. The sleeve bearings provide you with highly reliable performance over long periods.

ADDITIONAL OPTIONS

- mV sinewave pickup (standard option)
- **Ex** - mV sinewave ATEX approved (EXia)
- **HT** - mV sinewave high temp (232°C)
- **PPW** - square wave pulse
- **FC7** - 4-20 mA analogue outputs
- **R5** - FRT141D0FM battery powered display of flow rate & total, pulse & 4-20mA analogue outputs
- **R4** - FRT401D0FA battery powered display of flow rate & total, pulse output
- **R6** - FRT141D0FMI intrinsically safe battery powered display of flow rate & total, pulse & 4-20mA analogue outputs
- ANSI flanges
- PN flanges
- ND flanges

* Other flanges available on request

APPLICATIONS

- Water
- Light oils
- Solvents
- Low viscosity chemicals
- Batching
- Filling
- Pumps, engines, valves & other flow meters
- Blending monitoring
- Intrinsically safe ATEXII GEEx ia IIC T5 environment

UK Flowtechnik Ltd, 1 Central Park, Lenton Lane, Nottingham, NG7 2NR. United Kingdom
t: +44 (0) 115 9017 111 e: sales@ukflowtechnik.com www.ukflowtechnik.com

RN3 TURBINE FLOWMETER

SPECIFICATIONS

	RN3 Flowmeter
Linearity	Better than+/- 0.5% of reading
Repeatibility	+/-0.1% of reading
Pressuredrop	0.5 bar at maximumflow
Maximumworking pressure	35 bar (special connectionsavailable up to350 bar)
Temperature range	Standard pick off -30°Cto110°C
	ISpickoff -20°Cto100°C
	HighTemp -30°Cto 232°C
Body connections	BSPparallel thread with60°Ccone special connectionsareavailablefor hydraulicapplications

Flowrate Ranges		
Model no	Flow Range (l/ min)	Kfactor pulses/litre
RN3/15/1	1-10	6000
RN3/15/ 2	2-20	3800
RN3/ 20/ 5	5-50	1080
RN3/10/8	8-80	1080
RN3/25/15	15-150	620
RN3/25	25-250	362
RN3/ 32	45-450	111
RN3/40	67-670	82
RN3/ 50	110-1100	59
RN3/ 65	225-2250	16

DIAGRAM

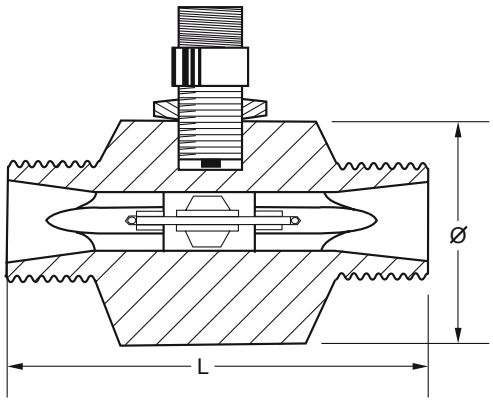

DIMENSIONS

Flowrate Ranges				
Model no	Thread Size BSP	L (mm)	Dia (mm)	Weight Kg
RN3/15/1	1/ 2”	82.6	50.0	0.7
RN3/15/ 2	1/ 2”	82.6	50.0	0.7
RN3/ 20/ 5	3/4”	82.6	50.0	0.7
RN3/ 20/ 8	3/4”	82.6	50.0	0.7
RN3/25/15	1”	90.5	63.5	1.2
RN3/ 25	1”	90.5	63.5	1.1
RN3/ 32	1 1/4”	110.0	75.0	1.6
RN3/40	1 1/ 2”	116.7	76.2	1.7
RN3/ 50	2”	154.0	89.0	3.1
RN3/ 65	3”	200	120	10

#The nominal K factor is based on water at 20°C Each flowmeter is individually calibrated on water andwill have a unique K factor.

Service & Warranty: For technical assistance,warranty replacement or repair contact your distributor:
UK Flowtechnik Ltd. 1 Central Park, Lenton Lane,Nottingham, NG7 2NR, UK.
Tel:+44 (0) 115 901 7111. Email: sales@ukflowtechnik.com. Web:www.ukflowtechnik.com

ISO 9001

RN3 TURBINE FLOWMETER

OPTIONS AND ORDERING INFORMATION

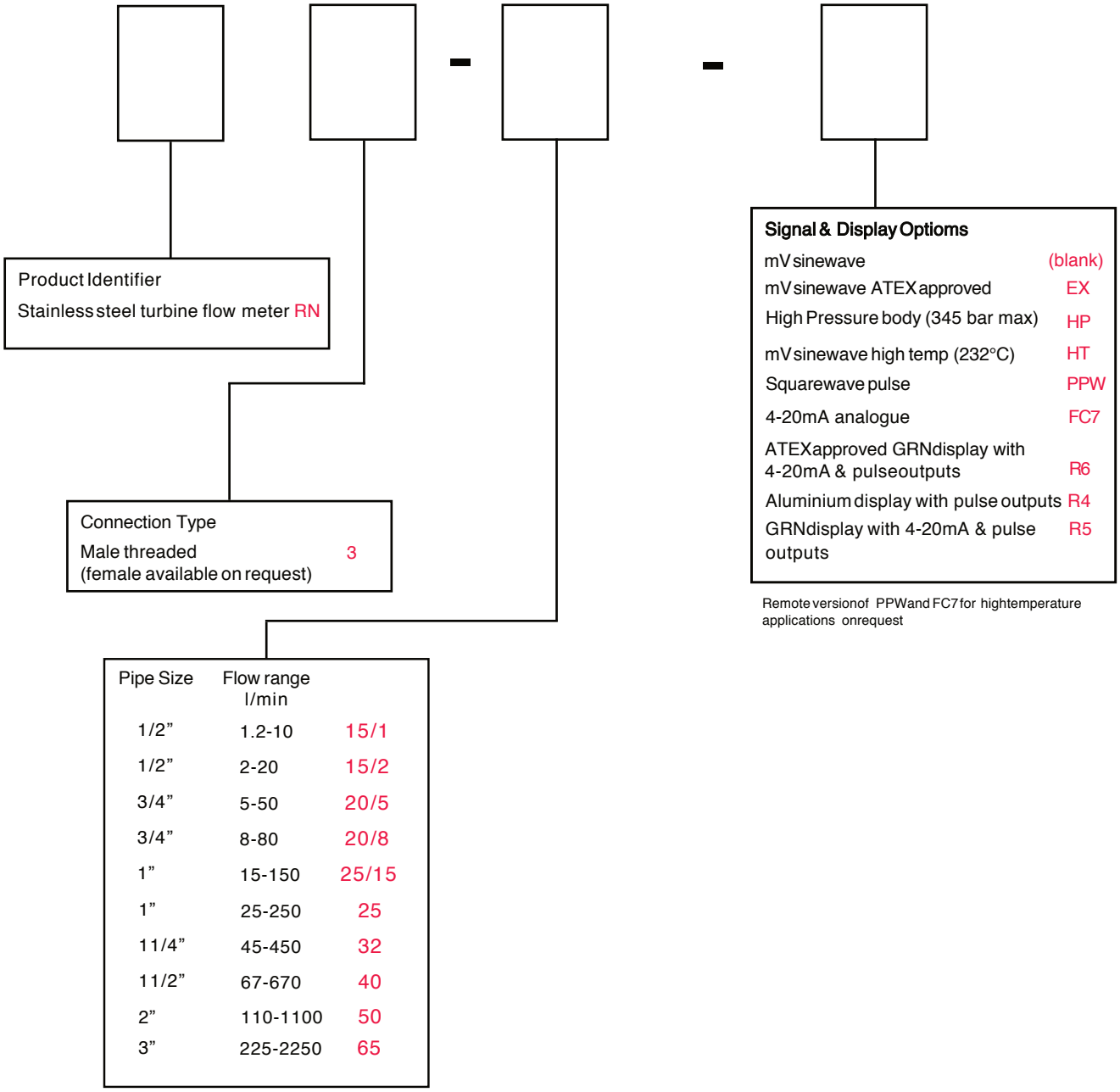

Service & Warranty: For technical assistance, warranty replacement or repair contact your distributor:
UK Flowtechnik Ltd. 1 Central Park, Lenton Lane, Nottingham, NG7 2NR, UK.
Tel: +44 (0) 115 901 7111. Email: sales@ukflowtechnik.com. Web: www.ukflowtechnik.com