FF10 series hygienic magnetic inductive flowmeters

The FLONET FF10 induction flow meter has been designed to measure volume flow rates of electrically conductive liquids (min 5µs/cm) in closed piping systems. Measurements in both flow directions are possible, with high measurement accuracy over a wide range of flow rates (0.1 to 10 m/s).
The measurement evaluation electronic unit includes a 2 line alphanumeric display to show the measured values where various operational parameters of the meter can be selected by means of an associated keyboard. Available are two passive binary outputs (frequency, impulse and limit values), one active current output and an output to connect a digital communication line. All meter functions and output parameters can be reset during the meter operation. If the meter is to be used as a commercial (invoicing) meter, some of its functions are blocked to prevent the user from interfering with the meter readings.

- Rugged Hygienic design
- DIN11851 or Tri-clamp fittings
- PTFE lined
- Sizes up to 4”

Technical Information

nominal diameter DN	10 to 100mm, 1/2" to 2.1/2" (Clamp)
nominal pressure PN (bar)	10
min. conductivity of measured fluid	20µS/cm, on special requirement 5µS/cm
max. temperature of measured fluid	+150°C
Electrode material	Hastelloy-C4 on special requirement platinum or tantalum
sensor lining	PTFE
Connections	Clamp (ITE Intertechnik DIN 32676), Tri Clamp (Tri Clover) screw fittings for food-processing applications (DIN 11851)
design version	compact or with remote electronic unit
measuring accuracy	±0.5% for flow rates 5 to 100% qs
measuring range	0.1 to 10m/s
signal and communications output	insulated current (0) 4 to 20mA, insulated frequency 0 to 1,000Hz, insulated impulse output 0.001 to 1,000/imp insulated communication interfaces USB and RS 485
power supply	24/115/230V AC +10%-15%, 50 to 60Hz, 15VA, 24VDC +10%-15%
ambient temperature	-5 to +55°C
protection class	IP 67 (IP 68)

Dimensional Information

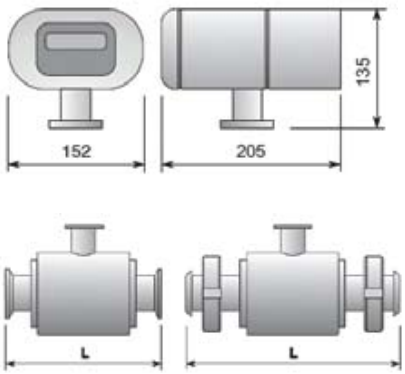

Diameter	10	15	20	25	32	40	50	65	80	100	1/2"	3/4"	1"	11/2"	2"	21/2"
Clamp	145	145	145	145	145	145	145	200	200	200	-	-	-	-	-	-
Tri-clamp	-	-	-	-	-	-	-	-	-	-	137	137	137	137	137	192
DIN11851	170	170	170	225	225	225	225	225	280	280	-	-	-	-	-	-

Options & Ordering Information

Housing Design

Compact design	FF10.4
Remote design	FF10.5

Flow range/pipe size

max 1 M3/HR (DN6)	01
Max 1.8 M3/HR (DN8)	02
Max 2.8 M3/HR (DN10)	03
Max 6.5 M3/HR (DN15)	04
Max 12 M3/HR (DN20)	05
Max 18 M3/HR (DN25)	06
Max 30 M3/HR (DN32)	07
Max 45 M3/HR (DN40)	08
Max 72 M3/HR (DN50)	09
Max 120 M3/HR (DN65)	10

Connection style

DIN 11851	1
Tri-clamp	2

Electrode & Grounding ring material

Hastelloy C-4	1
Platinum – Gold Platinum	2
Tantalum	3

Ingress Protection

Standard IP67	1
IP68 (for remote housing)	2

Grounding

Sensor to pipe	1
Grounding Electrode	2

Power supply

230 Vac 50/60 Hz	1
115 Vac 50/60 Hz	2
24 Vac 50/60 Hz	3
24 Vac/dc	4