# BELLHOUSINGS AND ACCESSORIES

# ROUND BELLHOUSINGS AND ACCESSORIES

## PRODUCT DESCRIPTION

- Connection elements for centring between electric motor and hydraulic pump
- For all hydraulic pumps available at short notice
- Both mounting sides are finished
- Horizontal and vertical application possible
- Material: aluminium
- Other materials on request; please also see page 92

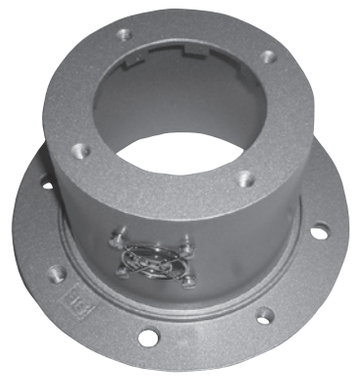

## RIGID BELLHOUSINGS ACC. TO VDMA 24561 FORM A

- Space saving storage due to stackability

| Order code rigid bellhousings | | | | | |
|---|---|---|---|---|---|
| Type | Size | | Length | | Boring |
| PR | 250 | / | 124 | / | 433/1 |

## BELLHOUSINGS WITH DAMPING FLANGE ACC. TO VDMA 24561 FORM B

- Reduction of noise level of the pump / motor unit up to 8 dB (A) possible, depending on pump construction
- Standard bellhousing made of aluminium, damping flanges made of aluminium / perbunan vulcanised
- No metallic connection
- Resistance: mineral oil max. 80°C

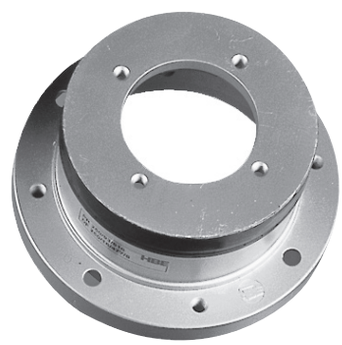

| Order code bellhousings with damping flange | | | | | | | |
|---|---|---|---|---|---|---|---|
| Type | Size | | Length | | Size DF | | Boring |
| PR | 450 | / | 234 | / | DF 300 | / | ... |

## BELLHOUSINGS FOR RECTANGULAR PUMP CONNECTIONS

- For all common external gear pumps
- Also available with damping flange, please see page 88

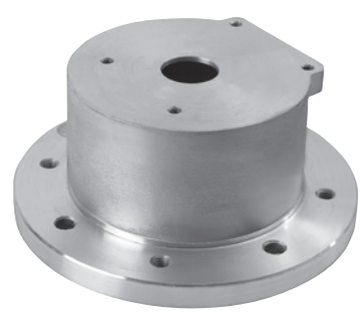

| Order code bellhousings for rectangular pump connections | | | | | |
|---|---|---|---|---|---|
| Type | Size | | Length | | Boring |
| PE (PRE) | 250 | / | 115 | / | 20 |

Our selection software for a precise bellhousing design is available free of charge here: https://login.hbe-hydraulics.com.

# RIGID BELLHOUSINGS
# ACC. TO VDMA 24561 FORM A

## FOR ELECTRIC MOTORS FRAME IMB 5-IMB 35-IM V1

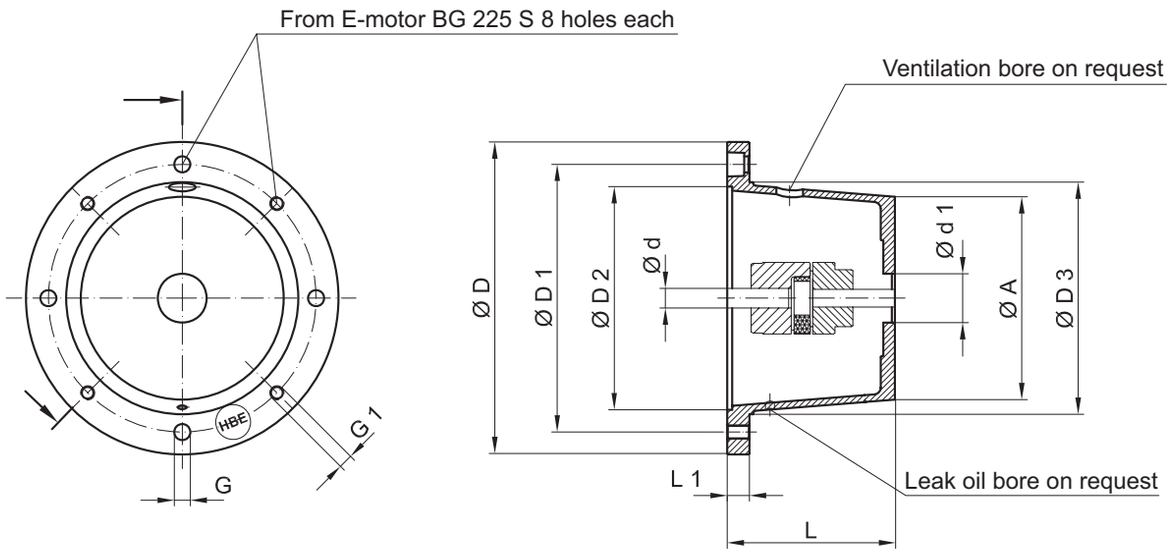


| IEC motor size shaft (d x L) | kW at n= 1500 min⁻¹ | Bellhousing | Foot flange | Gasket | Dimensions [mm] | | | | | | | | | |
|---|---|---|---|---|---|---|---|---|---|---|---|---|---|---|
| | | | | | Motor side | | | | | | | | Pump side | |
| | | Type | Type | Type | ø D | ø D1 | ø D2 | ø D3 | L | L1 | G | G1 | ø A | d1 min |
| 63 (11 x 23) | 0.12–0.18 | PR 140/95/... | – | D 140 GK | 140 | 115 | 95 | 95 | 95 | 15 | 9 | M8 | 90 | 25 |
| | | PR 140/105/... | | | | | | | 105 | 25 | | | | |
| | | PR 140/115/... | | | | | | | 115 | 35 | | | | |
| 71 (14 x 30) | 0.25–0.37 | PR 160/70/...* | PTFL 160 | D 160 GK | 160 | 130 | 110 | 110 | 70 | 13 | 9 | M8 | 107 | 20 |
| | | PR 160/80/...* | | | | | | | 80 | 13 | | | 106 | 20 |
| | | PR 160/90/...* | | | | | | | 90 | 13 | | | 105 | 20 |
| | | PR 160/100/... | | | | | | | 100 | 19 | | | 104 | 39 |
| | | PR 160/115/... | | | | | | | 115 | 34 | | | 104 | 39 |
| | | PR 163/ 80–95/...** | | | | | | | 80-95 | 19-34 | | | 164 | 60 |
| | | PR 163/ 100–115/...** | | | | | | | 100-115 | 19-34 | | | 164 | 60 |
| 80 (19 x 40) 90 S + L (24 x 50) | 0.55–0.75 | PR 200/80/... | PTFL 200 PTFS 200 | D 200 GK | 200 | 165 | 130 | 145 | 80 | 16 | 11 | M10 | 128 | 21 |
| | | PR 200/90/... | | | | | | | 90 | | | | 127 | 25 |
| | | PR 200/100/...* | | | | | | | 100 | | | | 127 | 25 |
| | | PR 200/110/...* | | | | | | | 110 | | | | 126 | 25 |
| | | PR 200/118/...* | | | | | | | 118 | | | | 126 | 25 |
| | | PR 200/124/...* | | | | | | | 124 | | | | 125 | 25 |
| | | PR 200/135/... | | | | | | | 135 | | | | 125 | 25 |
| | | PR 200/140/...* | | | | | | | 140 | | | | 125 | 25 |
| | 1.1–1.5 | PR 203/105/...** | | | | | | | 105 | | | | 170 | 96 |
| | | PR 203/115/...** | | | | | | | 115 | | | | 170 | 96 |
| | | PR 203/124/ ... VDMA** | | | | | | | 124 | | | | 170 | 96 |
| | | PR 203/140/ ... VDMA** | | | | | | | 140 | | | | 170 | 96 |
| | | PR 203/148/...** | | | | | | | 148 | | | | 170 | 96 |

*Design acc. to VDMA **for horizontal installation only

| IEC motor size shaft (d x L) | kW at n= 1500 min$^{-1}$ | Bellhousing | Foot flange | Gasket | Dimensions [mm] | | | | | | | | | |
|---|---|---|---|---|---|---|---|---|---|---|---|---|---|---|
| | | | | | Motor side | | | | | | | | Pump side | |
| | | Type | Type | Type | ⌀ D | ⌀ D1 | ⌀ D2 | ⌀ D3 | L | L1 | G | G1 | ⌀ A | d1 $_{min}$ |
| **100 L 112 M (28 x 60)** | 2.2–4 | PR 250/115/... | PTFL 250 PTFS 250 | D 250 GK | 250 | 215 | 180 | 190 | 115 | 19 | 14 | M12 | 178 | 24 |
| | | PR 250/120/...* | | | | | | | 120 | | | | 178 | 24 |
| | | PR 250/124/...* | | | | | | | 124 | | | | 177 | 42 |
| | | PR 250/128/...* | | | | | | | 128 | | | | 177 | 42 |
| | | PR 250/135/...* | | | | | | | 135 | | | | 177 | 42 |
| | | PR 250/148/...* | | | | | | | 148 | | | | 176 | 58 |
| | | PR 250/175/...* | | | | | | | 175 | | | | 175 | 58 |
| **132 S+M (38 x 80)** | 5.5–7.5 | PR 300/144/...* | PTFL 300 PTFS 300 | D 300 GK | 300 | 265 | 230 | 234 | 144 | 20 | 14 | M12 | 224 | 35 |
| | | PR 300/150/...* | | | | | | | 150 | | | | 223 | 43 |
| | | PR 300/155/...* | | | | | | | 155 | | | | 223 | 50 |
| | | PR 300/168/...* | | | | | | | 168 | | | | 222 | 60 |
| | | PR 300/196/...* | | | | | | | 196 | | | | 220 | 77 |
| | | PR 300/210/... | | | | | | | 210 | 34 | | | 220 | 77 |
| **160 M+L (42 x 110)** | 11–15 | PR 350/173/... | PTFL 350 PTFS 350 | D 350 GK | 350 | 300 | 250 | 260 | 173 | 25 | 18 | M16 | 241 | 35 |
| | | PR 350/188/...* | | | | | | | 188 | | | | 238 | 50 |
| **180 M+L (48 x 110)** | 18.5–22 | PR 350/204/...* | | | | | | | 204 | | | | 237 | 56 |
| | | PR 350/228/...* | | | | | | | 228 | | | | 240 | 77 |
| | | PR 350/256/...* | | | | | | | 256 | | | | 240 | 97 |
| **200 L (55 x 110)** | 30 | PR 400/188/...* | PTFS 400 | D 400 GK | 400 | 350 | 300 | 300 | 188 | 25 | 18 | M16 | 270 | 35 |
| | | PR 400/204/...* | | | | | | | 204 | | | | 267 | 60 |
| | | PR 400/228/...* | | | | | | | 228 | | | | 263 | 77 |
| | | PR 400/256/...* | | | | | | | 256 | | | | 258 | 97 |
| | | PR 400/271/... | | | | | | | 271 | 40 | | | 258 | 97 |
| **225 S+M (60 x 140)** | 37–45 | PR 450/217/... | PTFS 450 | D 450 GK | 450 | 400 | 350 | 350 | 217 | 25 | 18 | M16 | 300 | 47 |
| | | PR 450/222/... | | | | | | | 222 | | | | 299 | 50 |
| | | PR 450/234/...* | | | | | | | 234 | | | | 296 | 50 |
| | | PR 450/240/... | | | | | | | 240 | | | | 295 | 80 |
| | | PR 450/262/...* | | | | | | | 262 | | | | 290 | 100 |
| | | PR 450/285/...* | | | | | | | 285 | | | | 286 | 100 |
| | | PR 450/315/...* | | | | | | | 315 | | | | 280 | 100 |
| **250 M (65 x 140)** | 55 | PR 550/230/... | PTFS 550 | D 550 GK | 550 | 500 | 450 | 450 | 230 | 25 | 18 | M16 | 362 | 50 |
| | | PR 550/248/...* | | | | | | | 248 | | | | 359 | 100 |
| | | PR 550/265/...* | | | | | | | 265 | | | | 356 | 100 |
| **280 S+M (75 x 140)** | 75–90 | PR 550/275/...* | | | | | | | 275 | | | | 354 | 120 |
| | | PR 550/295/...* | | | | | | | 295 | | | | 350 | 120 |
| | | PR 550/315/...* | | | | | | | 315 | | | | 347 | 120 |
| **315 S+M 315 L (80 x 170)** | 110–200 | PR 660/310/...* | PTFS 660 | D 660 GK | 660 | 600 | 550 | 550 | 310 | 32 | 22 | M20 | 425 | 120 |
| | | PR 660/330/...* | | | | | | | 330 | | | | 416 | 120 |
| | | PR 660/345/...* | | | | | | | 345 | | | | 410 | 120 |
| **355 L/ 400 L (100 x 210)** | 250–400 | PR 800/315/... | – | – | 800 | 740 | 680 | 660 | 315 | 50 | 22 | M20 | 443 | 145 |
| | | PR 800/360/... | | | | | | | 360 | | | | 425 | 120 |
| | | PR 800/380/... | | | | | | | 380 | | | | 416 | 120 |
| | | PR 800/395/... | | | | | | | 395 | | | | 410 | 120 |

*Design acc. to VDMA

# BELLHOUSINGS WITH DAMPING FLANGE ACC. TO VDMA 24561 FORM B

## FOR ELECTRIC MOTORS FRAME IMB 5-IMB 35-IM V1

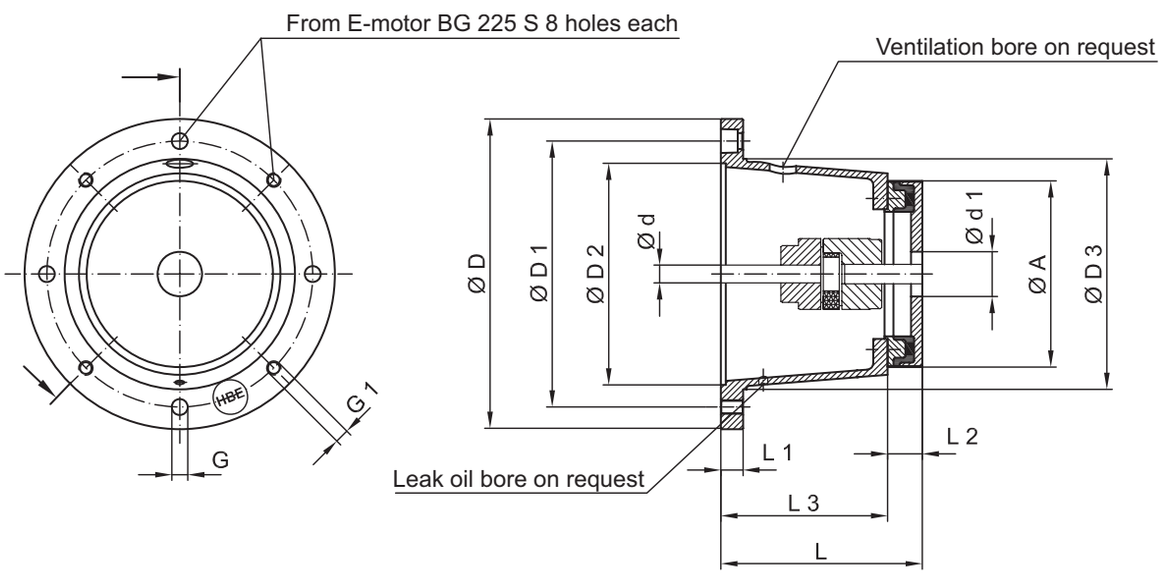


| IEC motor size shaft (d x L) | kW at n= 1500 min⁻¹ | Bellhousing and damping flange | Foot flange | Gasket | Dimensions [mm] | | | | | | | | | | | |
|---|---|---|---|---|---|---|---|---|---|---|---|---|---|---|---|---|
| | | | | | Motor side | | | | | | | | | | Pump side | |
| | | Type | Type | Type | ⌀ D | ⌀ D1 | ⌀ D2 | ⌀ D3 | L | L3 | L2 | L1 | G | G1 | ⌀ A | $d1_{min}$ |
| 80 (19 x 40) 90 S + L (24 x 50) | 0.55-0.75 | PR 200/100 DF 200/...* | PTFL 200 PTFS 200 | D 200 GK | 200 | 165 | 130 | 145 | 100 | 70 | 30 | 16 | 9 | M8 | 139 | 31 |
| | | PR 200/110 DF 200/...* | | | | | | | 110 | 80 | | 16 | | | | |
| | | PR 200/118 DF 200/...* | | | | | | | 11 8 | 88 | | 14 | | | | |
| | 1.1-1.5 | PR 200/124 DF 200/...* | | | | | | | 124 | 94 | | 30 | | | | |
| | | PR 200/140 DF 200/...* | | | | | | | 140 | 110 | | 16 | | | | |
| 100 L 112 M (28 x 60) | 2.2-4 | PR 250/120 DF 250/...* | PTFL 250 PTFS 250 | D 250 GK | 250 | 215 | 180 | 190 | 120 | 85 | 35 | 25 | 14 | M12 | 186 | 32 |
| | | PR 250/124 DF 200/...* | | | | | | | 124 | 94 | 30 | 18 | | | 139 | 31 |
| | | PR 250/128 DF 250/...* | | | | | | | 128 | 93 | 35 | 19 | | | 186 | 32 |
| | | PR 250/135 DF 250/...* | | | | | | | 135 | 100 | 35 | 19 | | | 186 | 32 |
| | | PR 250/148 DF 200/...* | | | | | | | 148 | 120 | 28 | 19 | | | 139 | 31 |
| | | PR 250/148 DF 250/...* | | | | | | | 148 | 115 | 33 | 19 | | | 186 | 32 |
| | | PR 250/175 DF 250/...* | | | | | | | 175 | 140 | 35 | 18 | | | 186 | 32 |
| 132 S+M (38 x 80) | 5.5-7.5 | PR 300/144 DF 250/...* | PTFL 300 PTFS 300 | D 300 GK | 300 | 265 | 230 | 234 | 144 | 109 | 35 | 20 | 14 | M12 | 186 | 32 |
| | | PR 300/150 DF 200/...* | | | | | | | 150 | 120 | 30 | | | | 139 | 31 |
| | | PR 300/150 DF 250/...* | | | | | | | 150 | 115 | 35 | | | | 186 | 32 |
| | | PR 300/155 DF 250/...* | | | | | | | 155 | 120 | 35 | | | | 186 | 32 |
| | | PR 300/155 DF 300/...* | | | | | | | 155 | 115 | 40 | | | | 222 | 32 |
| | | PR 300/168 DF 250/...* | | | | | | | 168 | 133 | 35 | | | | 186 | 32 |
| | | PR 300/195 DF 300/...* | | | | | | | 195 | 155 | 40 | | | | 222 | 32 |

*Design acc. to VDMA

| IEC motor size shaft (d x L) | kW at n= 1500 min⁻¹ | Bellhousing and damping flange | Foot flange | Gasket | Dimensions [mm] | | | | | | | | | | | |
|---|---|---|---|---|---|---|---|---|---|---|---|---|---|---|---|---|
| | | | | | Motor side | | | | | | | | | | Pump side | |
| | | Type | Type | Type | ø D | ø D1 | ø D2 | ø D3 | L | L3 | L2 | L1 | G | G1 | ø A | $d1_{min}$ |
| **160 M+L (42 x110)** | 11–15 | PR 350/188 DF 250/...* | PTFL 350 PTFS 350 | D 350 GK | 350 | 300 | 250 | 260 | 188 | 153 | 35 | 25 | 18 | M16 | 186 | 32 |
| | | PR 350/204 DF 300/...* | | | | | | | 204 | 164 | 40 | | | | 222 | 32 |
| **180 M+L (48 x110)** | | PR 350/228 DF 300/...* | | | | | | | 228 | 188 | 40 | | | | 222 | 32 |
| | 18.5–22 | PR 350/256 DF 350/...* | | | | | | | 256 | 211 | 45 | | | | 258 | 46 |
| **200 L (55 x110)** | 30 | PR 400/204 DF 300/...* | PTFS 400 | D 400 GK | 400 | 350 | 300 | 300 | 204 | 164 | 40 | 25 | 18 | M16 | 222 | 32 |
| | | PR 400/228 DF 300/...* | | | | | | | 228 | 188 | 40 | | | | 222 | 32 |
| | | PR 400/256 DF 350/...* | | | | | | | 256 | 211 | 45 | | | | 258 | 46 |
| **225 S+M (60 x140)** | 37–45 | PR 450/234 DF 300/...* | PTFS 450 | D 450 GK | 450 | 400 | 350 | 350 | 234 | 194 | 40 | 25 | 18 | M16 | 222 | 32 |
| | | PR 450/262 DF 300/...* | | | | | | | 262 | 222 | 40 | | | | 222 | 32 |
| | | PR 450/262 DF 350/...* | | | | | | | 262 | 217 | 45 | | | | 258 | 46 |
| | | PR 450/285 DF 350/...* | | | | | | | 285 | 240 | 45 | | | | 258 | 46 |
| | | PR 450/315 DF 350/...* | | | | | | | 315 | 270 | 45 | | | | 258 | 46 |
| **250 M (65 x140)** | 55 | PR 550/248 DF 350/...* | PTFS 550 | D 550 GK | 550 | 500 | 450 | 450 | 248 | 203 | 45 | 25 | 18 | M16 | 258 | 46 |
| | | PR 550/265DF 250/...* | | | | | | | 265 | 230 | 35 | | | | 186 | 32 |
| | | PR 550/265 DF 350/...* | | | | | | | 265 | 220 | 45 | | | | 258 | 46 |
| | | PR 550/275 DF 350/...* | | | | | | | 275 | 230 | 45 | | | | 258 | 46 |
| **280 S (75 x140)** | 75–90 | PR 550/275 DF 400/...* | | | | | | | 275 | 215 | 60 | | | | 365 | 120 |
| | | PR 550/293 DF 350/...* | | | | | | | 293 | 248 | 45 | | | | 258 | 46 |
| | | PR 550/315 DF 300/...* | | | | | | | 315 | 275 | 40 | | | | 222 | 32 |
| | | PR 550/315 DF 350/...* | | | | | | | 315 | 270 | 45 | | | | 258 | 46 |
| **315 S+M 315 L (80 x170)** | 110–200 | PR 660/310 DF 350/...* | PTFS 660 | D 660 GK | 660 | 600 | 550 | 550 | 310 | 265 | 45 | 32 | 22 | M20 | 258 | 46 |
| | | PR 660/330 DF 350/...* | | | | | | | 330 | 285 | 45 | | | | 258 | 46 |
| | | PR 660/345 DF 350/...* | | | | | | | 345 | 300 | 45 | | | | 258 | 46 |
| | | PR 660/345 DF 400/...* | | | | | | | 345 | 285 | 60 | | | | 365 | 120 |
| **355 L/400 L (100 x 210)** | 250–400 | PR 800/360 DF 350/... | – | – | 800 | 740 | 680 | 680 | 360 | 315 | 45 | 50 | 22 | M20 | 258 | 46 |
| | | PR 800/375 DF 400/... | | | | | | | 375 | 315 | 60 | | | | 365 | 120 |
| | | PR 800/380 DF 350/... | | | | | | | 380 | 335 | 45 | | | | 258 | 46 |
| | | PR 800/395 DF 400/... | | | | | | | 395 | 335 | 60 | | | | 365 | 120 |
| | | PR 800/410 DF 400/... | | | | | | | 410 | 350 | 60 | | | | 365 | 120 |

*Design acc. to VDMA

## RADIAL WEIGHT LOAD

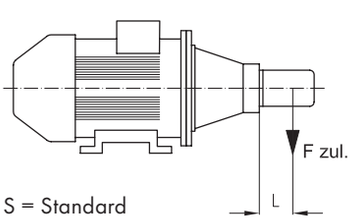


S = Standard
H = Hard

$$Fzul. = \frac{(F[N] \times L)}{\text{effective SPA}^{**}}$$

| Damping flange | DF 200/... | | DF 250/16 | | DF 300/32 | | DF 350/63 | | DF 400/84 | |
|---|---|---|---|---|---|---|---|---|---|---|
| | S | H | S | H | S | H | S | H | S | H |
| Centroidal distance for radial load L [mm] | 70 | | 100 | | 100 | | 200 | | 200 | |
| Permittable weight load $F_{zul.}$ [N]*** | 300 | 400 | 1100 | 1300 | 1600 | 1900 | 1400 | 2000 | 3000 | 4000 |

** Centroidal distance

*** for operating temperature up to 60°C

# BELLHOUSINGS FOR RECTANGULAR PUMP CONNECTIONS

| IEC motor size shaft (d x L) | kW at n= 1500 min$^{-1}$ | Frame | Bellhousing | Foot flange | Gasket | Dimensions [mm] | | | | | | | | | | | |
|---|---|---|---|---|---|---|---|---|---|---|---|---|---|---|---|---|---|
| | | | | | | Motor side | | | | | | | | Pump side | | | |
| | | | Type | Type | Type | ⌀D | ⌀D1 | ⌀D2 | ⌀D3 | L | L1 | G | G1 | ⌀ A | ⌀ A1 | ⌀ A2 | $d1_{min}$ |
| **63 (11 x 23)** | 0.12–0.18 | IMB 14 | PE 90/60/... | – | – | 90 | 75 | 60 | 62 | 60 | 10 | – | 7 | 90 | 69 | 34 | 22 |
| | | | PE 120/85/... | | | 120 | 100 | 80 | 80 | 85 | 12 | – | | 87 | 67 | 32 | 22 |
| | | IMB 5 | PE 140/60/... | | | 140 | 115 | 95 | 100 | 60 | 11 | 9 | M8 | 90 | 69 | 34 | 22 |
| **71 (14 x 30)** | 0.25–0.37 | IMB 14 | PE 105/70/... | – | D 140 | 105 | 85 | 70 | 70 | 70 | 10 | 9 | 7 | 90 | 69 | 34 | 22 |
| | | | PE 140/95/... | | | 140 | 115 | 95 | 100 | 95 | 12 | | 9 | 90 | 69 | 34 | 22 |
| | | IMB 5 | PRE 160/70/... | PTFL 160 | D 160 | 160 | 130 | 110 | 110 | 70 | 13 | 9 | M8 | 90 | 66 | 34 | 20 |
| | | | PE 160/95/... | | | | | | | 95 | 14 | | | 120 | 90 | 45 | 21 |
| **80 (19 x 40)** | 0.55–0.75 | IMB 14 | PE 120/85/... | – | – | 120 | 100 | 80 | 80 | 85 | 12 | – | 7 | 120 | 67 | 32 | 22 |
| | | | PRE 160/80/... | PTFL 160 | D 160 | 160 | 130 | 110 | 110 | 80 | 13 | 9 | 9 | 90 | 66 | 34 | 20 |
| | | | PE 160/95/... | | | | | | | 95 | 14 | | | 120 | 90 | 45 | 21 |
| | | IMB 5 | PRE 200/80/... | PTFL 200 PTFS 200 | D 200 | 200 | 165 | 130 | 145 | 80 | 16 | 11 | M10 | Ø 128 | | | 21 |
| | | | PE 200/95/... | | | | | | | 95 | 15 | | | 118 | 86 | 43 | 36.5 |
| | | | PE 200/126/... | | | | | | | 126 | 16 | | 11 | 180 | 158 | 65 | 50.8 |
| **90 S+L (24 x 50)** | 1.1–1.5 | IMB 14 | PE 140/95/... | – | D 140 | 140 | 115 | 95 | 100 | 95 | 12 | 9 | 9 | 120 | 90 | 45 | 25.4 |
| | | | PRE 160/90/... | PTFL 160 | D 160 | 160 | 130 | 110 | 110 | 90 | 13 | 9 | 9 | 90 | 66 | 34 | 20 |
| | | | PE 160/105/... | | | | | | | 105 | 24 | | | 120 | 90 | 45 | 21 |
| | | IMB 5 | PRE 200/90/... | PTFL 200 PTFS 200 | D 200 | 200 | 165 | 130 | 145 | 90 | 16 | 11 | M10 | Ø 127 | | | 25 |
| | | | PE 200/126/... | | | | | | | 126 | 16 | | M11 | 180 | 158 | 65 | 50.8 |
| **100 L 112 M (28 x 60)** | 2.2–4 | IMB 14 | PE 160/108/... | PTFL 160 | D 160 | 160 | 130 | 110 | 110 | 108 | 27 | 9 | 9 | 120 | 90 | 45 | 21 |
| | | IMB 5 | PRE 250/115/... | PTFL 250 PTFS 250 | D 250 | 250 | 215 | 180 | 190 | 115 | 19 | 14 | M12 | Ø 178 | | | 24 |
| **132 S+M (38 x 80)** | 5.5–7.5 | IMB 5 | PRE 300/144/... | PTFL 300 PTFS 300 | D 300 | 300 | 265 | 230 | 234 | 144 | 20 | | M12 | Ø 224 | | | 36.5 |
| | | | PE 300/2/143 | | | | | | | 143 | 21 | | | 180 | 158 | 62 | 50.8 |
| **160 M+L (42 x 110)** | 11–15 | IMB 5 | PRE 350/173/... | PTFL 350 PTFS 350 | D 350 | 350 | 300 | 250 | 260 | 173 | 25 | 18 | M16 | Ø 241 | | | 35 |
| **180 M+L (48 x 110)** | 18.5–22 | | PRE 350/197/... | | | | | | | 197 | | | | 230 | 175 | 77 | 60 |
| **200 L (55 x 110)** | 30 | IMB 5 | PRE 400/188/... | PTFS 400 | D 400 | 400 | 350 | 300 | 300 | 188 | 25 | 18 | M16 | Ø 270 | | | 35 |
| **225 S+M (60 x 140)** | 37–45 | IMB 5 | PRE 450/217/... | PTFS 450 | D 450 | 450 | 400 | 350 | 350 | 217 | 25 | 18 | M16 | Ø 300 | | | 47 |
| | | | PRE 450/234/... | | | | | | | 234 | | | | Ø 296 | | | 50 |
| **250 M (65 x 140)** | 55 | IMB 5 | PRE 550/230/... | PTFS 550 | D 550 | 550 | 500 | 450 | 450 | 230 | 26 | 18 | M 16 | Ø 362 | | | 50 |
| **280 S+M (75 x 140)** | 75–90 | | | | | | | | | | | | | | | | |

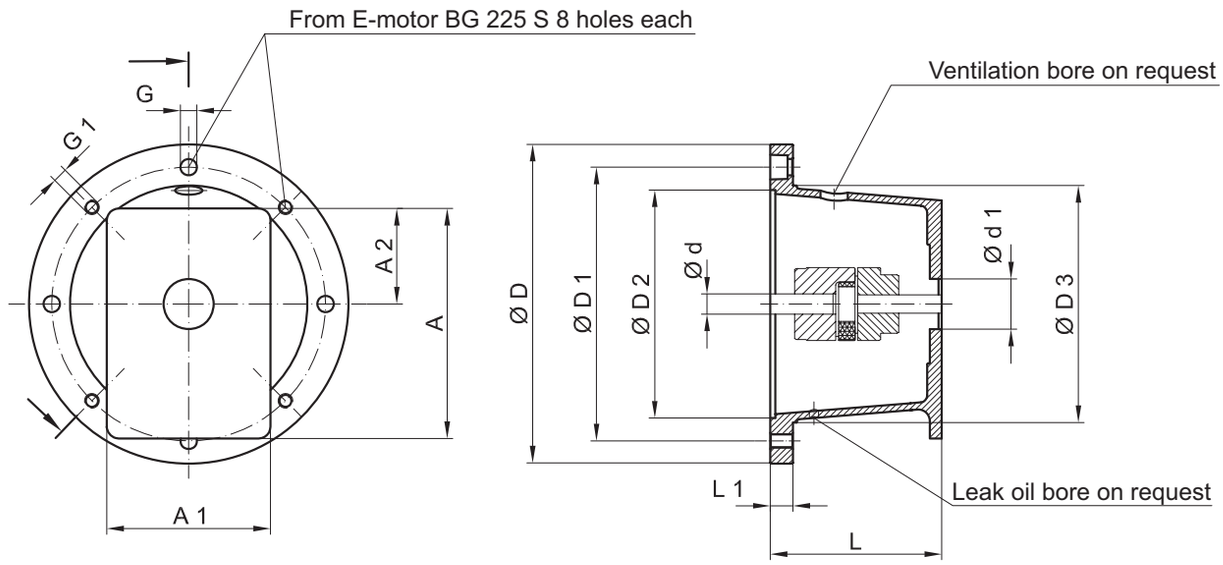


## DIMENSIONS PUMP FACE CODE FOR GEAR PUMPS

### BB: 05

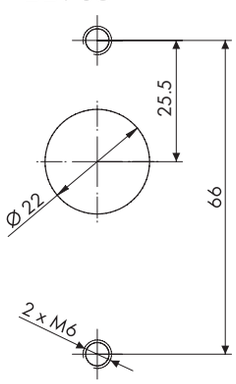


### BB: 10

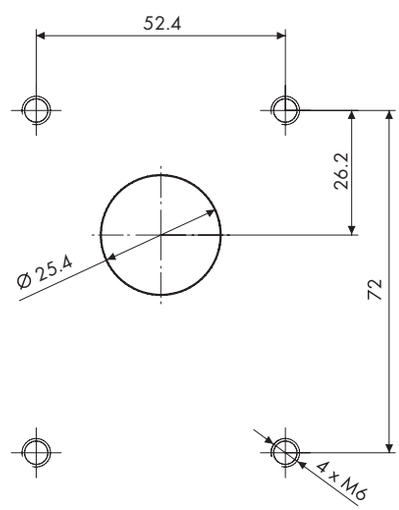


### BB: 20

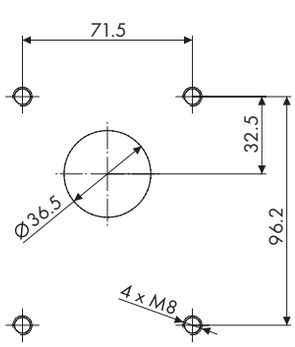


### BB: 25/27

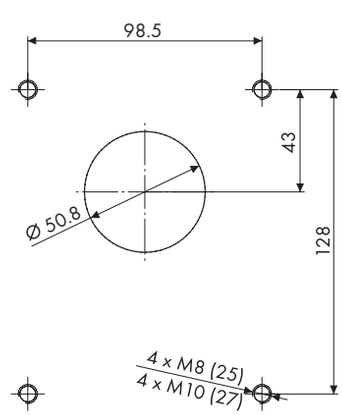

# BELLHOUSINGS FOR RECTANGULAR PUMP CONNECTIONS

## DIMENSIONS PUMP FACE CODE FOR GEAR PUMPS

**BB: 35**

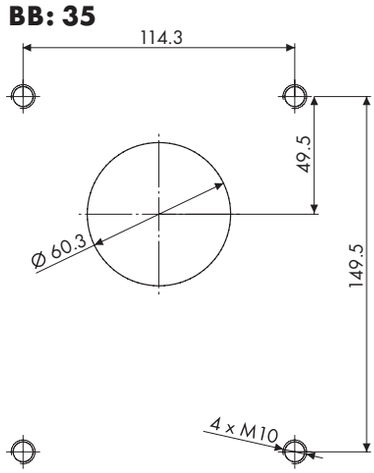


**BB: 40**

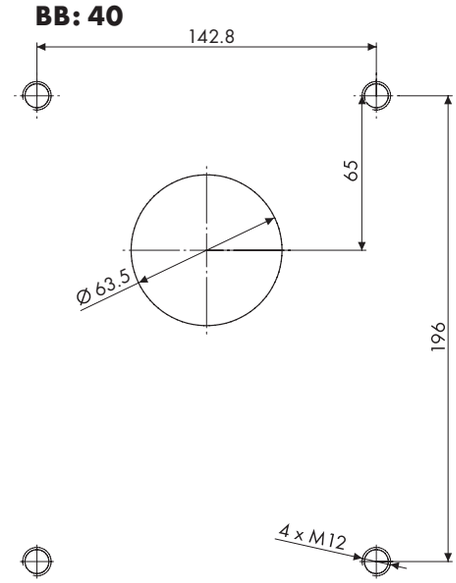


**BB: 45**

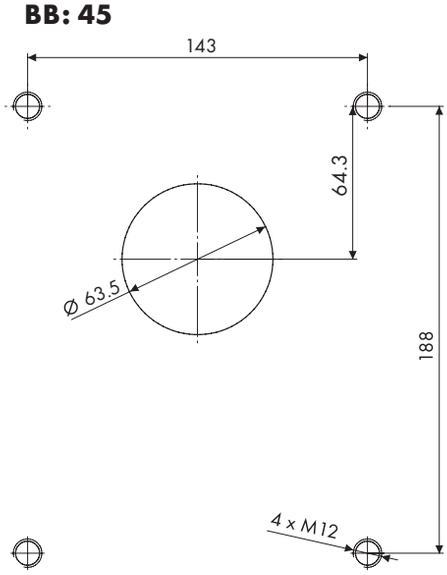


**BB: 60**

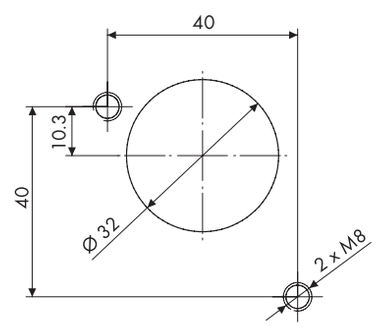


**BB: 70**

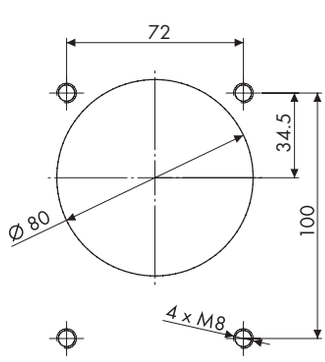


**BB: 80**

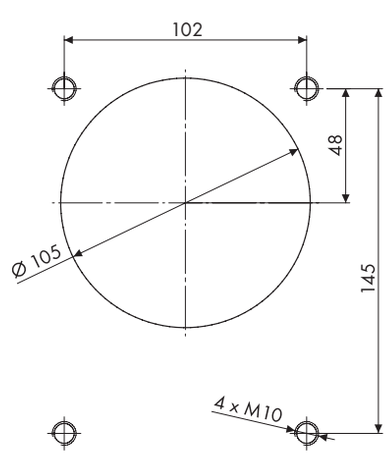

## BASIC PROGRAMME BELLHOUSINGS FOR GEAR PUMPS

| Type | Possible rectangular pump face code | | | | | | | | | |
|---|---|---|---|---|---|---|---|---|---|---|
| | 5 | 10 | 20 | 25/27 | 35 | 40 | 45 | 60 | 70 | 80 |
| PE 90/60/... | • | • | | | | | | • | | |
| PE 105/70/... | • | • | | | | | | • | | |
| PE 120/85/... | • | • | • | | | | | • | | |
| PE 140/60/... | • | • | | | | | | • | | |
| PE 140/95/... | • | • | • | | | | | • | • | |
| PRE 160/70/... | • | • | | | | | | • | | |
| PRE 160/80/... | • | • | | | | | | • | | |
| PRE 160/90/... | | • | | | | | | • | | |
| PE 160/95/... | | | • | | | | | | • | |
| PRE 200/80/... | • | • | | | | | | • | | |
| PRE 200/90/... | | • | | | | | | • | | |
| PE 200/95/... | | | | | | | | | • | |
| PE 200/100/... | | | • | | | | | | • | |
| PRE 200/100/... | | • | | | | | | | | |
| PE 200/126/... | | | | • | | | | | | • |
| PRE 250/110/... | | • | • | | | | | • | | |
| PRE 250/115/... | | • | • | • | | | | • | • | |
| PRE 300/144/... | | | • | • | | | | | • | |
| PRE 350/173/... | | | • | • | • | | | | • | • |
| PRE 350/197/... | | | | | • | • | • | | | • |
| PRE 400/188/... | | | | | • | | | | | • |
| PRE 450/217/... | | | | | • | | | | | • |
| PRE 450/234/... | | | | | | | | | | • |
| PRE 550/230/... | | | | | • | • | • | | | • |