UK Flowtechnik

Specialists in flow metering, pumps, couplings and process measurement equipment

PRODUCT DATASHEET

UK Flowtechnik Ltd
1 Central Park
Lenton Lane
Nottingham
NG7 2NR
United Kingdom

Phone +44 (0) 11 59 01 71 11
UK Free Phone 0800 4334 770
Fax +44 (0) 11 59 86 88 75

sales@ukflowtechnik.com
www.ukflowtechnik.com

RN4 Flanged Axial Turbines

The RN4 series axial turbine flow meter is used for liquids such as water, light oils, solvents and low viscosity chemicals & used for batching, flow rate monitoring, controlling, blending and filling. The RN4 is highly accurate and often used for testing the performance of pumps, engines, valves and other flowmeters. In hazardous areas you can use the flowmeters with the IS pick-off coil approved to ATEX II 1 G EEx ia IIC T5. Pressures are generally according to flange rules.

Features & Benefits

- Machined from a solid billet of 316 Stainless Steel
- No internal seals
- Safe Area, Intrinsically Safe and Flame Proof designs
- Tungsten bearings for reliability and long life
- Options for Super Duplex rotor and Nickel/Tungsten bearings for sea water operation
- Options for directly mounted amplified pulse, signal converter or displays

Technical Data

	15/0.7	15/1	15/2	20/5	20/8	25/11	25/15	25	32	40	50	80	80FB	100	125	150	200
Flow Range l/min	0.7-7	1-10	2-20	5-50	8-80	11-110	15-150	25-250	45-450	67-670	110-1,100	225-2,250	300-3,000	450-4,500	675-6,750	900-9,000	1,800-18,000
Connection Size	½" (DN15)			¾" (DN20)		1" (DN25)			1.1/4" (DN32)	1.1/2" (DN40)	2" (DN50)	3" (DN80)		4" (DN100)	5" (DN125)	6" (DN150)	8" (DN200)
Meter Factor (Pulses per litre)	10,600	6,000	3,000	1,080	1,080	655	520	362	102	72	41	16		6.6		2.6	1.7
Body & Turbine Hangars Material	316 Stainless Steel																
Rotor Material	431 Stainless Steel (option for Ferralium 255/Super Duplex)																
Shaft/ Bearing Material	Tungsten (Seawater resistant version with Ferralium rotor)																
Linearity	+/- 2% of Reading	+/- 1% of Reading		+/- 0.5% of Reading													
Max Pressure	As per Flange Rating																
Max Temperature (°C)	110°C (232°C high temperature version)																
Output	mV Sine-Wave inductive pick-up (options for high temperature, ATEX/IECEx Intrinsically safe or ATEX Intrinsically Safe/Flame Proof dual certified pick-ups)																
Options	Amplified pulse output, 4-20 mA output, directly mounted battery powered displays (ATEX/IECEx versions)																

Dimensional Data

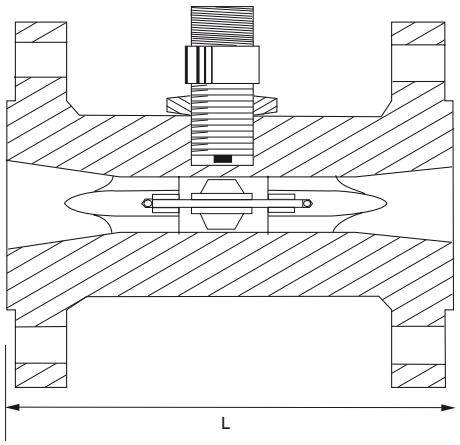

	L (mm)	Weight (KG)
RN4/15/0.7	140.0	2
RN4/15/1	140.0	2
RN4/15/2	140.0	2
RN4/20/5	140.0	3
RN4/20/8	140.0	3
RN4/25/11	140.0	3.5
RN4/25/15	140.0	3.5
RN4/25	140.0	3.3
RN4/32	145.0	3.9
RN4/40	152.4	8
RN4/50	165.1	11
RN4/80	250.0	21
RN4/100	300.0	32
RN4/125	350	41
RN4/150	360.0	51
RN4/200	360.0	80

Ordering Information

RN4	/	80	/	B	/	HT	-	

Product Identifier

316 Stainless Steel Turbine Flowmeter with Flanged Connections	RN4

Rotor Options

431 Stainless Steel Rotor	- -
Ferralium 255 (super Duplex) Rotor	A

Flange Styles

ANSI 150 LB	B
DIN PN16	N
ANSI 300 LB	C
DIN PN25	O
ANSI 600LB	I
ANSI 900LB	J
ANSI 1500LB	K
ANSI 2500LB	L

Pick-up & Integral Options

Standard Pick-up (mV sine-wave output, Mil-plug, Max 110oC)	- -
ATEX EEx ia Pick-up (mV sine-wave output, 300mm flying lead [consult factory for longer lengths] Max 110oC)	EX
ATEX dual EEx d/EEx ia Pick-up (C/W EEx d enclosure with ½" NPT cable entry)	EXD
High Temperature Pick-up, max 232°C (mV sine-wave output, Mil-plug, Max 110oC)	HT
Amplified Pulsed Output (12-24 Vdc, square-wave output with 4m cable)	PPW
4-20 mA Output (2 wire output, enclosure and bracket mount directly on the meter)	FC7
RT14 backlit rate totaliser with all outputs (GRN housing) [scaled pulse, alarms, 4-20mA, backlight]*	R5
Intrinsically safe RT14 backlit rate totaliser with all outputs (GRN housing) [scaled pulse, alarms, 4-20mA, backlight][IECEx & ATEX approved]*	R6
RT40 backlit rate totaliser with all outputs (GRN housing) [scalable pulse output, backlight]*	R7

Flow Range l/min	Flange Bore	
0.7-7	½" (DN15)	15/0.7
1-10	½" (DN15)	15/1
2-20	½" (DN15)	15/2
5-50	¾" (DN20)	20/5
8-80	¾" (DN20)	20/8
10-110	1" (DN25)	25/11
15-150	1" (DN25)	25/15
25-250	1" (DN25)	25
45-450	1.1/4" (DN32)	32
67-670	1.1/2" (DN40)	40
110-1,100	2" (DN50)	50
225-2,250	3" (DN80)	80
300-3,000	3" (DN80)	80FB
450-4,500	4" (DN100)	100
675-6,750	5" (DN125)	125
900-9,000	6" (DN150)	150
1,800-18,000	8" (DN200)	200