UK Flowtechnik

Gear Couplings

0115 901 7111 | ukflowtechnik.com | sales@ukflowtechnik.com

Gear Couplings

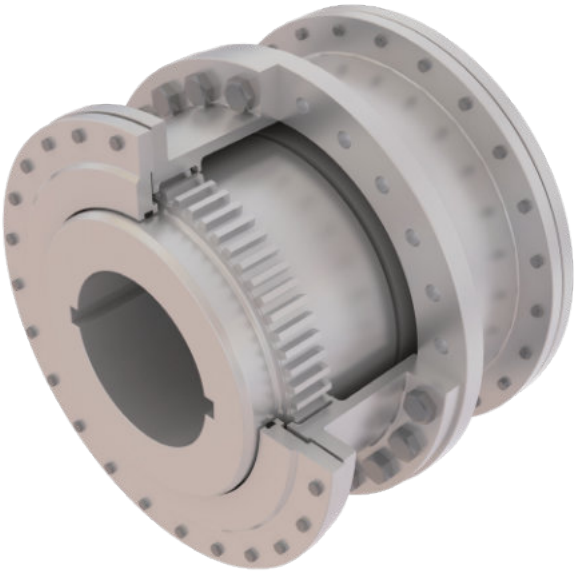

UK Flowtechnik Gear Couplings serve as a mechanical device which connect the shafts of two distinct machines and can accommodate large axial moments as well as small amounts of shaft misalignment.

Our Gear Couplings transmit more torque than other types of couplings of similar physical size. Because of the superior load transmitting capability, Gear Couplings have become widely used for higher speed applications, as well as for applications that require a combination of high torque capacity and a low inertia of the drive system.

This coupling is made up of one flexible geared half and a rigid half. A flexible & rigid couplings such as this is primarily used for floating shaft applications. The coupling accommodates angular misalignment but does not accommodate parallel parallel displacement of shafts.

Gear Couplings are torsionally rigid and couple two designs, one of which is completely flexible and the other is rigid. Gear Couplings consist of two shaft hubs with external teeth, which are connected by means of a sleeve, usually two pieces, containing internal teeth. A flexible spline with the hubs and sleeves rotating together is the working action of a Gear Coupling. The correct type of lubrication, applied frequently and adequately, is essential for the successful operation of the coupling and system.

Gear Couplings are interchangeable with many of the industry standard products.

Gear Coupling Types

G20 Type

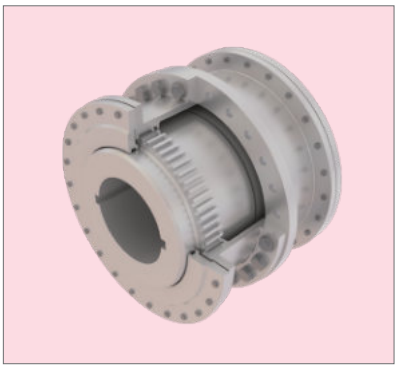

G20 Type (Large)

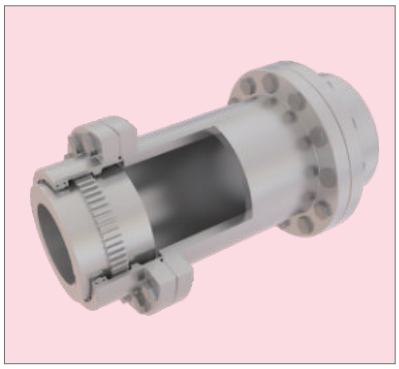

G32 Type (Spacer)

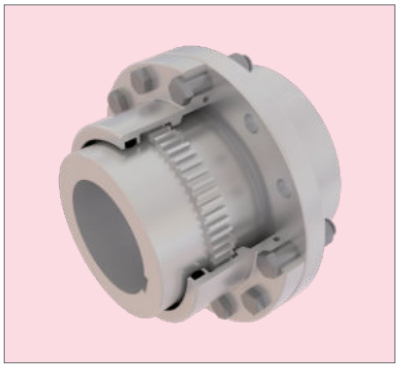

G52 Type

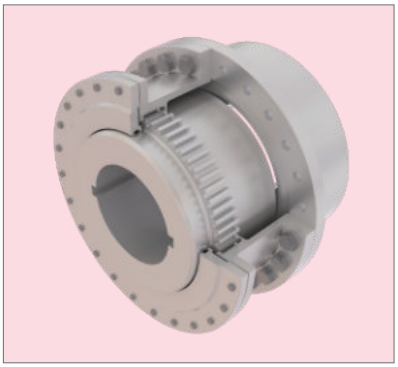

G52 Type (Large)

G52 Type (Floating Shaft)

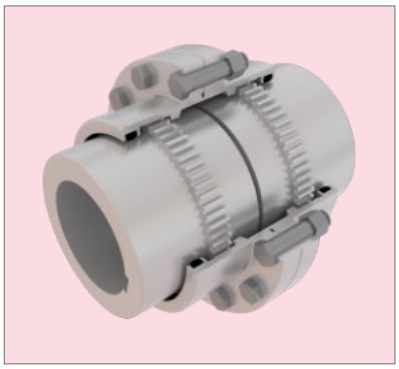

KSS Type

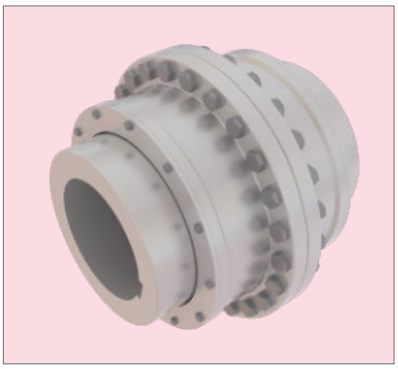

KCC Type (Large)

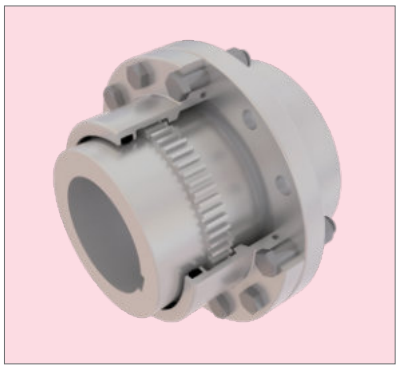

KSE Type

KCE Type (Large)

KSP Type (Spacer)

G20 Type

Standard Flanged Sleeve Double Engagement

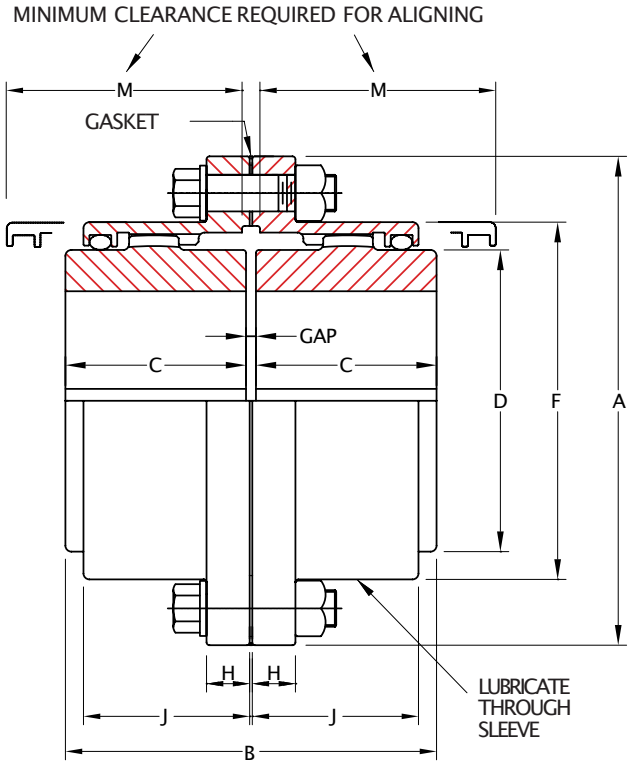

Size	Torque Rating (Nm)	Allow Speed RPM	Max Bore (mm)	Min Bore (mm)	Cplg Weight (Kg)	Lube Weight (Kg)	Dimensions (Millimeters)								
							A	B	C	D	F	H	J	M	GAP
1010	1,140	8,000	50	13	4.54	0.0408	115.9	88.9	42.9	68.6	83.8	14.0	38.9	51	3
1015	2,350	6,500	65	20	9.07	0.0726	152.4	101.6	49.3	86.4	105.2	19.0	47.8	61	3
1020	4,270	5,600	78	26	15.90	0.1130	177.8	127.0	62.0	105.2	126.5	19.0	59.4	77	3
1025	7,470	5,000	98	32	29.50	0.2127	212.7	158.9	77.0	130.6	154.9	21.8	71.6	92	5
1030	12,100	4,400	111	39	43.10	0.3630	239.7	187.4	91.2	152.4	180.3	21.8	83.8	107	5
1035	18,500	3,900	134	51	68.00	0.5440	279.4	218.9	106.4	177.8	211.3	28.4	97.5	130	6
1040	30,600	3,600	160	64	97.50	0.9070	317.5	247.3	120.6	209.6	245.4	28.4	111.3	145	6
1045	42,000	3,200	183	77	136.00	1.0400	346.1	277.7	134.9	235.0	274.1	28.4	122.9	166	8
1050	56,600	2,900	200	89	191.00	1.7700	388.9	314.3	153.2	254.0	305.8	38.1	140.7	183	8
1055	74,000	2,650	220	102	249.00	2.2200	425.4	344.3	168.1	279.4	334.3	38.1	158.0	204	8
1060	90,400	2,450	244	115	306.00	3.1800	457.2	384.4	188.2	304.8	366.0	25.4	169.2	229	8
1070	135,000	2,150	289	127	485.00	4.3500	527.0	451.5	220.7	355.6	424.9	28.4	195.6	267	10

*Coupling Weight is without Bore Machining

G20 Type

Large Flanged Sleeve Double Engagement

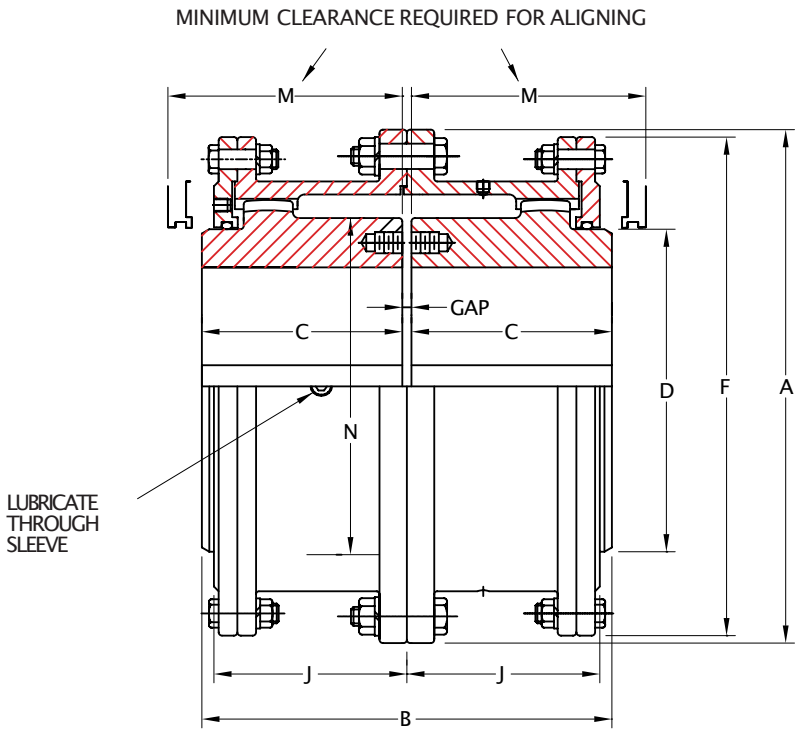

Size	Torque Rating (Nm)	Allow Speed RPM	Max Bore (mm)	Min Bore (mm)	Cplg Weight (Kg)	Lube Weight (Kg)	Dimensions(Millimeters)								
							A	B	C	D	F	J	M	N	GAP
1080	170,000	1,750	266	101.60	703	9.5	590.6	508.5	249.2	355.6	571.5	242.8	300.0	368.3	10
1090	226,000	1,550	290	114.30	984	12.2	660.4	565.4	276.4	393.7	641.4	265.2	327.2	419.1	13
1100	310,000	1,450	320	127.00	1,302	15.0	711.2	622.3	304.8	444.5	698.5	293.6	355.6	469.9	13
1110	413,000	1,330	373	139.70	1,678	17.7	774.7	679.2	333.2	495.3	749.3	322.3	384.0	520.7	13
1120	555,000	1,200	400	152.40	2,114	20.9	838.2	717.8	352.6	546.1	825.5	341.4	403.4	571.5	13
1130	719,000	1,075	440	165.10	2,595	32.7	911.4	761.7	371.3	584.2	886	362.0	434.8	609.6	19
1140	911,000	920	460	177.80	3,107	33.1	965.2	806.4	393.2	635.0	939.8	378.0	457.2	660.4	19
1150	1,100,000	770	490	190.50	3,765	40.8	1,028.7	857.2	419.1	685.8	1,003.3	407.9	482.6	711.2	19
1160	1,310,000	650	525	254.00	4,708	43.1	1,111.2	908.0	441.3	736.6	1,085.9	419.1	504.6	762	25
1180	1,660,000	480	600	285.75	6,260	49.9	1,219.2	939.8	457.2	838.2	1,193.8	434.8	520.7	863.6	25
1200	2,140,000	370	660	317.50	8,582	68.0	1,358.9	1098.60	536.6	927.1	1,308.1	514.4	635.0	965.2	25
1220	2,720,000	290	725	349.25	11,685	107.0	1,511.3	1193.80	584.2	1,016.0	1,473.2	565.2	685.8	1,066.8	25

*Coupling Weight is without Bore Machining

G52 Type

Standard Flanged Sleeve Single Engagement

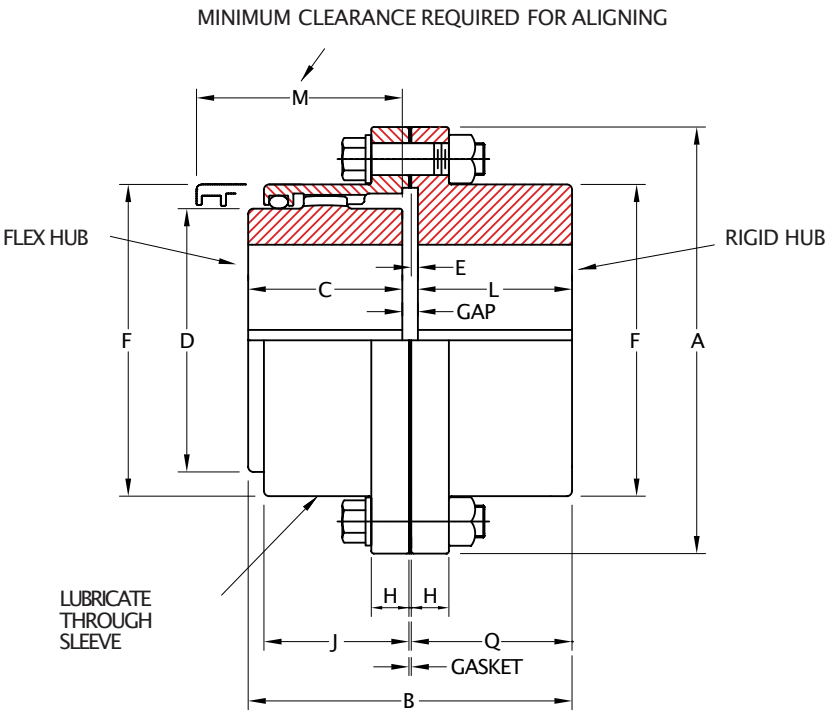

Size	Torque Rating (Nm)	Allow Speed RPM	Max Bore		Min Bore (mm)	Cplg Weight (Kg)	Lube Weight (Kg)	Dimensions(Millimeters)											
			Flex (mm)	Rigid (mm)				A	B	C	D	E	F	H	J	L	M	Q	GAP
1010	1,140	8,000	50	65	13	4.08	0.023	115.9	86.6	42.9	68.6	2.5	83.8	14.0	38.9	39.6	51	42.2	4
1015	2,350	6,500	65	80	20	8.16	0.041	152.4	99.6	49.3	86.4	2.5	105.2	19.0	47.8	46.2	61	48.8	4
1020	4,270	5,600	78	98	26	13.6	0.068	177.8	124.5	62.0	105.2	2.5	126.5	19.0	59.4	58.4	76	61.0	4
1025	7,470	5,000	98	118	32	24.9	0.118	212.7	155.4	77.0	130.6	2.5	154.9	21.8	71.6	73.7	91	76.2	5
1030	12,100	4,400	111	140	39	38.6	0.181	239.7	183.9	91.2	152.4	2.5	180.3	21.8	83.8	87.9	107	90.4	5
1035	18,500	3,900	134	163	51	61.2	0.272	279.4	214.1	106.4	177.8	2.5	211.3	28.4	97.5	102.1	130	104.6	6
1040	30,600	3,600	160	196	64	90.7	0.467	317.5	242.8	120.6	209.6	4.1	245.4	28.4	111.3	115.3	145	119.4	7
1045	42,000	3,200	183	216	77	129.3	0.557	346.1	273.1	134.9	235.0	4.1	274.1	28.4	122.9	130.6	165	134.6	8
1050	56,600	2,900	200	235	89	181.4	0.907	388.9	309.1	153.2	254.0	5.1	305.8	38.1	140.7	147.3	183	152.4	9
1055	74,000	2,650	220	266	102	251.7	1.130	425.4	349.5	168.1	279.4	5.1	334.3	38.1	158.0	172.7	203	177.8	9
1060	90,400	2,450	244	290	115	-	1.700	457.2	385.1	188.2	304.8	6.6	366.0	25.4	169.2	186.4	229	193.0	10
1070	135,000	2,150	289	340	127	-	2.270	527.0	453.6	220.7	355.6	8.4	424.9	28.4	195.6	220.2	267	228.6	13

*Coupling Weight is without Bore Machining

G52 Type

Large Flanged Sleeve Single Engagement

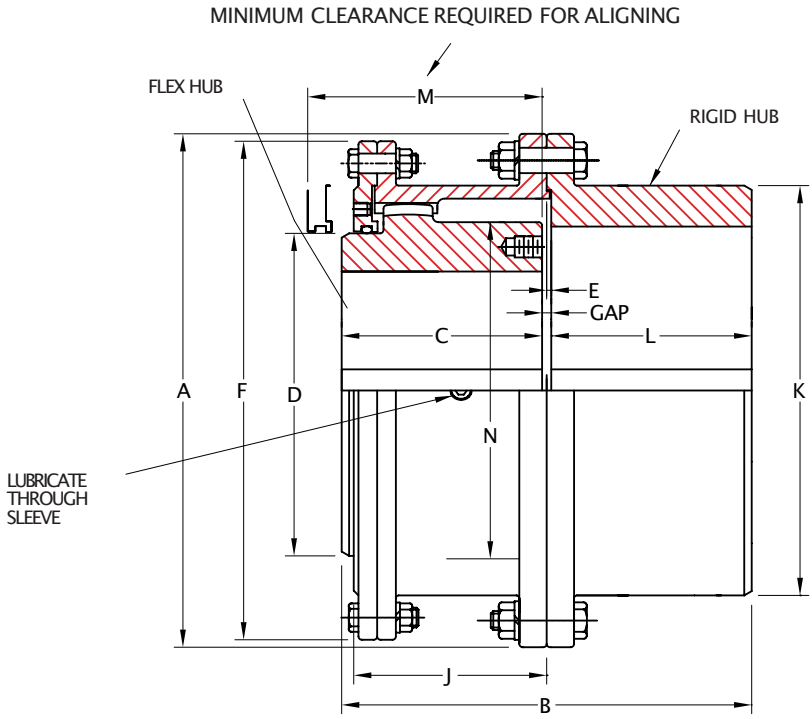

※IMPORTANT: When couplings are mounted on a floating shaft, do not exceed allowable shaft speed for the assembly.

Size	Torque Rating (Nm)	Allow Speed RPM	Max Bore		Min Bore (mm)	Cplg Weight (Kg)	Lube Weight (Kg)	Dimensions(Millimeters)											
			Flex (mm)	Rigid (mm)				A	B	C	D	E	F	J	K	L	M	N	GAP
1080	170,000	1,750	266	340	101.60	699	5	590.6	511.0	249.4	355.6	8.1	571.5	242.8	450.8	248.9	300.0	368.3	13
1090	226,000	1,550	290	380	114.30	984	6	660.4	566.4	276.4	393.7	8.1	641.4	265.2	508.0	275.8	327.2	419.1	14
1100	310,000	1,450	320	400	127.00	1,252	8	711.2	625.3	304.8	444.5	9.7	698.5	293.6	530.4	304.8	355.6	469.9	16
1110	413,000	1,330	373	440	139.70	1,637	9	774.7	682.2	333.2	495.3	9.7	749.3	322.3	584.2	333.2	384.0	520.7	16
1120	555,000	1,200	400	483	152.40	2,077	11	838.2	720.6	352.6	546.1	9.7	825.5	341.4	647.7	352.3	403.4	571.5	16
1130	719,000	1,075	440	500	165.10	2,572	17	911.4	761.7	371.3	584.2	9.7	886.0	362.0	708.2	371.3	434.8	609.6	19
1140	911,000	920	460	535	177.80	3,062	17	965.2	805.9	393.2	635.0	9.7	939.8	378.0	749.3	393.7	457.2	660.4	19
1150	1,100,000	770	490	580	190.50	3,751	21	1,028.7	857.2	419.1	685.8	9.7	1,003.3	407.9	812.8	419.1	482.6	711.2	19
1160	1,310,000	650	525	630	254.00	4,631	22	1,111.2	908.3	441.3	736.6	12.7	1,085.8	419.1	886.0	441.5	501.6	762.0	25
1180	1,660,000	480	600	710	285.75	6,069	25	1,219.2	939.8	457.2	838.2	12.7	1,193.8	434.8	993.6	457.2	520.7	863.6	25
1200	2,140,000	370	660	780	371.50	8,482	34	1,358.9	1,098.6	536.6	927.1	12.7	1,308.1	514.4	1,095.2	536.4	635.0	965.2	25
1220	2,720,000	290	725	890	349.25	11,680	54	1,511.3	1,196.8	584.2	1,016.0	12.7	1,473.2	565.2	1,244.6	584.2	685.8	1,066.8	28

* Coupling Weight is without Bore Machining

Lubrication

Grease Lubrication

Grease on the Grid & Hub teeth before assembling the cover.

Fill up the grease through the lubrication plug of the assembled coupling.

Selection

Select the grease according to the ambient temperature range.

Supplement

Every three months or 240~250 operating hours, the grease must be replenished.

Replacement

Every three years or 4,000 operating hours, the deteriorated grease must be completely removed and replaced.

Recommended Industrial Lubricants (NYGL Grade#2)

NO	Manufacturer	Ambient Temperature Range	
		-18˚c ~ 66˚c	-34˚c ~ 38˚c
		(0˚F ~ 150˚F)	(-30˚F ~ 100˚F)
1	Amoco Oil Co.	Amolth Grease #2	Amolith Grease #2
2	Atlantic Richfield Co.	Litholene HEP 2	Litholene HEP 2
3	Chevron U.S.A Inc.	Chevron Dura-Lith EP-2	Chevron Dura-Lith EP-2
4	Cities Service Co.	Citgo HEP-2	Citgo HEP-2
5	Conoco Inc.	EP Conolith #2	EP Conolith #2
6	Exxon Company U.S.A	Ronex MP	Ronex MP
7	Gulf Oil Corp.	Gulfcrown Grease #2	Gulfcrown Grease #2
8	E. F. Houghton & Co.	Cosmolbe #2	Cosmolbe #2
9	Impenrial Oil Ltd.	Esso MP Grease H	Lotemp EP
10	Keystone Div. (Pennwalt)	#81 Light	#84 Light
11	Mobil Oil Corp.	Mobilux EP111	Mobilux #1
12	Phillips Petroleum Co.	IB & RB Grease	Philub IB & RB Grease
13	Shell Oil Co.	Alvania Grease #2	Alvania Grease #2
14	Standard Oil Co.	Factran #2	Factran #2
15	Sun Oil Company	Prestige 42	Prestige 42
16	Texaco Lubricants	Starplex HD2	Multifac EP2
17	Union Oil Co.	Union Undoba #2	Union Undoba #2
18	Valvoline Oil Co.	Val-Lith EP #2	Val-Lith EP #2

Installation

UK Flowtechnik Gear Couplings are designed to provide a mechanical connection between two rotating shafts of mechanical equipment, by using the gear mesh to accommodate inherent misalignment while transmitting the power and torque between the connected shafts.

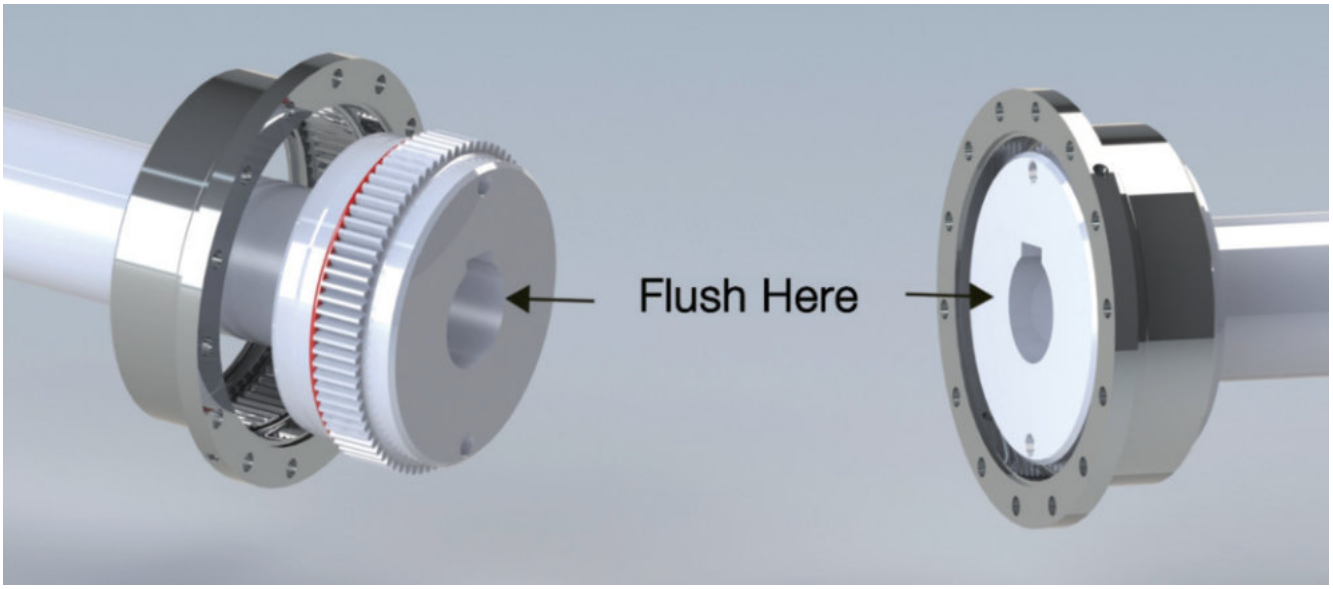

1) Mount Flanged Sleeves, Seals and Hub

- Examine the coupling assembly to ensure there is no visible damage.
- Clean the hub bores and shafts using lint free cloth. Remove any nicks, burrs or debris.
- When assembled, the keys should have a close side to side fit in the keyways of the hub, with a slight clearance over the top of the keys.
- Place the flanged sleeves with oil rings on the shafts before mounting the flex hubs.

2) Straight Bore with Clearance / Slip Fit

- Install the keys in the shaft.
- Check to be sure that the set screws in the hub do not protrude into the keyway or the bore. Remove or back out the set screw to provide clearance during assembly.
- Slide the hub up the shaft to the desired axial position.
- Assemble and tighten the set screws using a calibrated torque wrench.

3) Straight Bore with Interference Fit

- Accurately measure the bore and shaft diameters to assure proper fit.
- Install the keys in the shaft.
- Heat the hub until the bore is efficiently larger than the shaft.
- When the hub has warmed, install it on the shaft to the desired axial position.

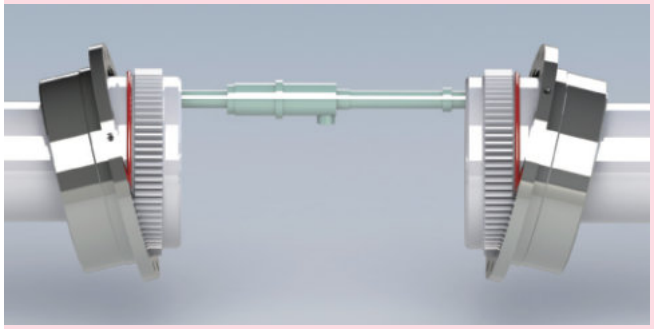

4) Taper Bore

- Check for acceptable contact pattern between the hub and the shaft.
- Put the hub on the shaft, keeping the keyways aligned.
- Lightly tap the face of the hub with a soft mallet. The resultant position will provide a starting point for the hub axial draw up.
- Use a micrometer to measure the distance from the shaft end to the hub face, and record the dimension.
- Mount a dial indicator to read axial hub advancement. Alternatively, the indicator can be positioned to contact the end of the hub.
- Remove the hub and install the keys in the shaft.
- Heat the hub until the bore is sufficiently larger than the shaft. Warm temperatures are recommended.
- When the hub has expanded, install it quickly on the shaft to the "zero" set point. Continue to advance the hub up the taper to the desired axial position.

Installation

5) Shaft Alignment

- Use a micrometer or a space bar equal in thickness and at 90° intervals to measure the distance between the hubs to gap.
- The Angular Misalignment value is the maximum difference between the measurements X and Y taken at opposite end of the flanges.

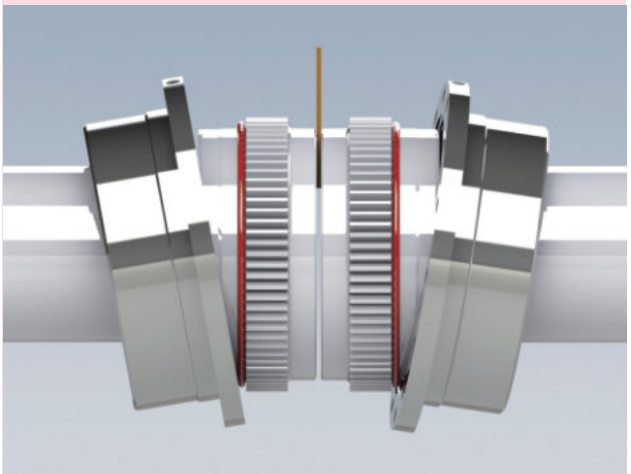

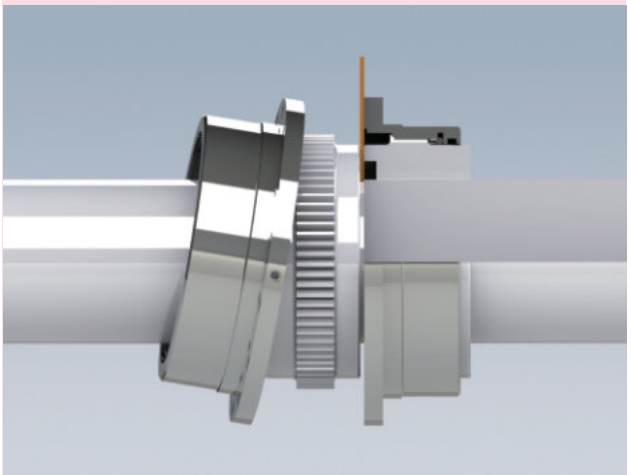

6) Sleeve Installation

- Install the gasket between the flanges and gap disc into the counterbore of each rigid hub for floating shaft assemblies and bolt the flanges together.
- Check the alignment of the couplings using a depth micrometer or with feeler gauges.

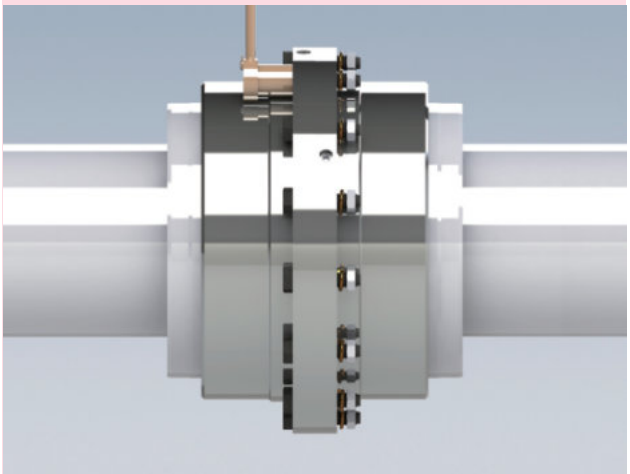

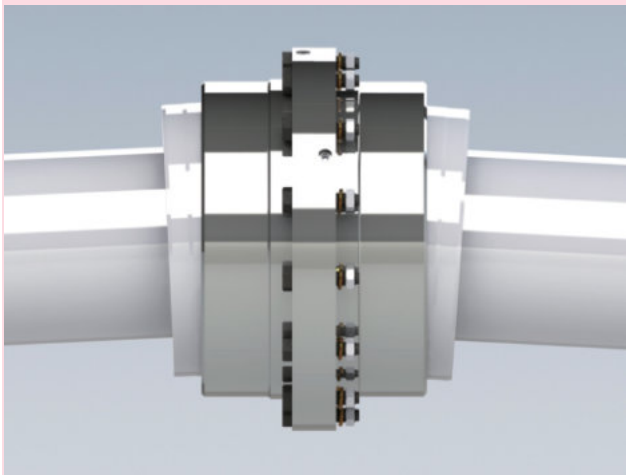

Annual Maintenance

1. Check the alignment. If the maximum operating misalignment values are exceeded, realign the coupling.
2. Inspect the oil-ring and gasket to determine if replacement parts are required.
3. Re-lubricate the couplings by using a general purpose grease until excess appears at the access hole.

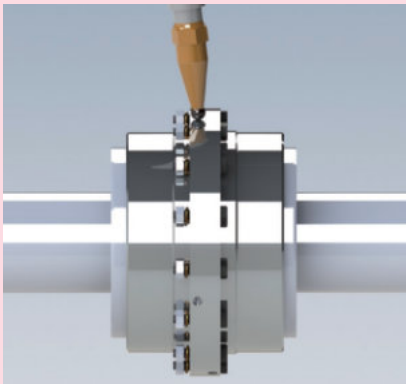

Alignment Data

To improve the service life of the coupling, shafts should be aligned to minimise deflection of the flexing elements. Shaft alignment is required in the axial, parallel and angular directions, with each of these values not to exceed the recommended installation limits. Shaft alignment can be measured using various established methods: including Laser Alignment, Reverse Dial Indicator and Rim & Face.

Parallel Misalignment

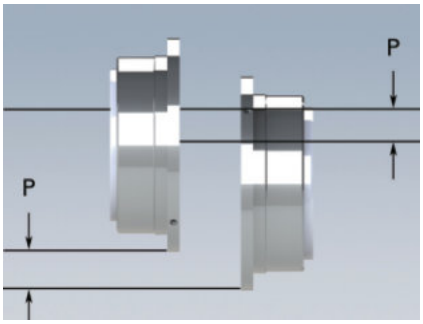

Angular Misalignment

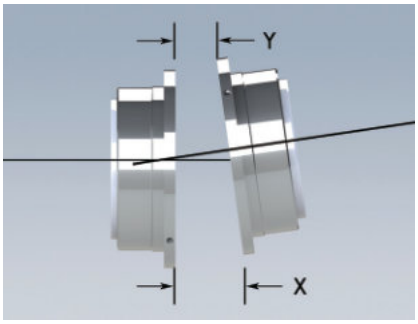

Misalignment Capacity

Size	Recommended Installation		Operating		Fastener Tightening Torque Values (Nm)
	Parallel Offset-P Max(mm)	Angular (X-Y) Max(mm)	Parallel Offset-P Max(mm)	Angular (X-Y) Max(mm)	
1010	0.05	0.15	0.66	1.80	12
1015	0.08	0.18	0.86	2.26	42
1020	0.08	0.23	1.02	2.74	102
1025	0.10	0.28	1.27	3.43	203
1030	0.13	0.33	1.52	3.99	203
1035	0.15	0.38	1.83	4.65	339
1040	0.18	0.46	2.13	5.49	339
1045	0.20	0.51	2.39	6.15	339
1050	0.23	0.56	2.72	6.65	339
1055	0.28	0.61	3.12	7.32	339
1060	0.28	0.66	3.35	9.98	339
1070	0.33	0.79	3.94	9.32	339
1080	0.41	0.81	2.46	4.83	-
1090	0.43	0.91	2.64	5.49	-
1100	0.48	1.02	2.97	6.15	-
1110	0.56	1.14	3.30	6.81	-
1120	0.58	1.24	3.51	7.49	-
1130	0.61	1.32	3.61	7.98	-
1140	0.64	1.45	3.81	8.64	-
1150	0.69	1.55	4.17	9.32	-
1160	0.71	1.60	4.37	10.97	-
1180	0.74	1.83	4.22	9.65	-
1200	0.89	2.03	5.28	12.14	-
1220	0.99	2.21	5.87	13.31	-

Puller Holes

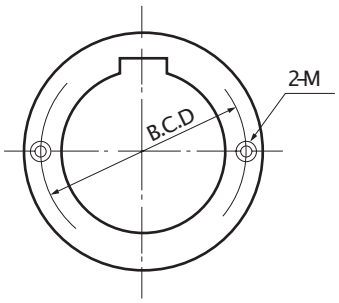

Size	B.C.D(mm)	Bolt
1010	52.32	M10x1.5x13
1015	69.85	M10x1.5x13
1020	88.90	M10x1.5x13
1025	112.78	M10x1.5x13
1030	128.52	M10x1.5x13
1035	152.40	M12x1.75x16
1040	180.98	M16x2.0x20
1045	200.03	M16x2.0x20
1050	215.90	M20x2.5x22
1055	238.13	M20x2.5x22
1060	263.53	M20x2.5x22
1070	311.15	M24x3.0x30